All Dimension Must Be Held Within
Unless otherwise noticed (mm/inch)
X.XXX [X.XXXX]:±0.050[0.002]
X.XX [X.XXX]:±0.127[0.005]
X.X [X.XX]:±0.254[0.010]
X° : ±1°

CBM VER #	Customer VER #	ECN #	Change description	Name	Date

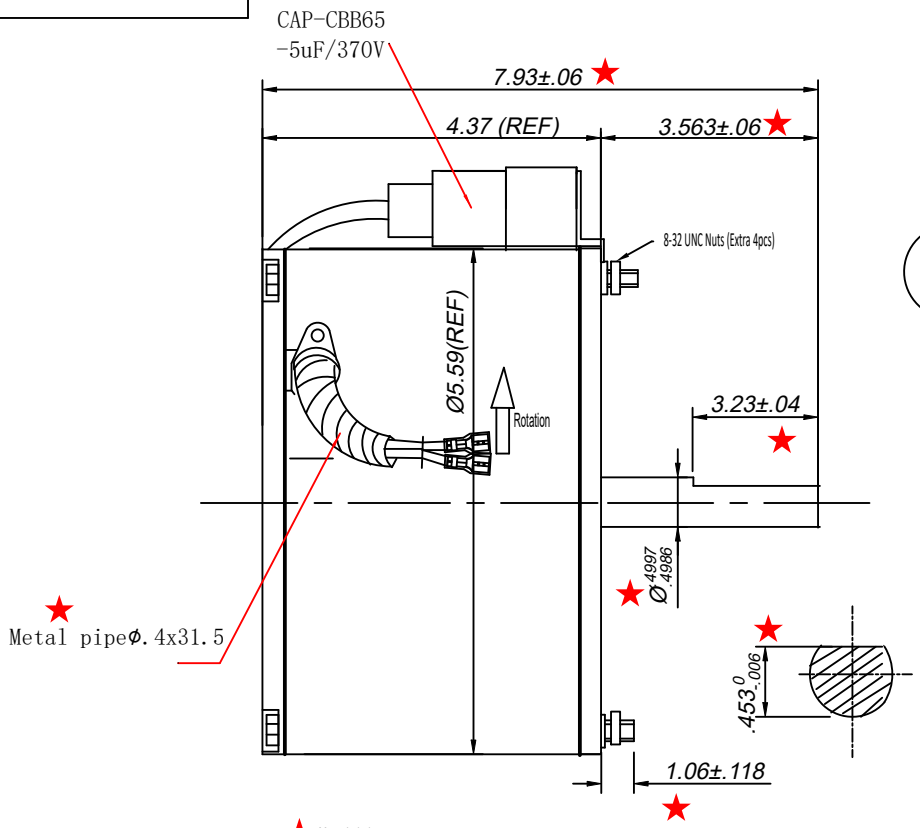

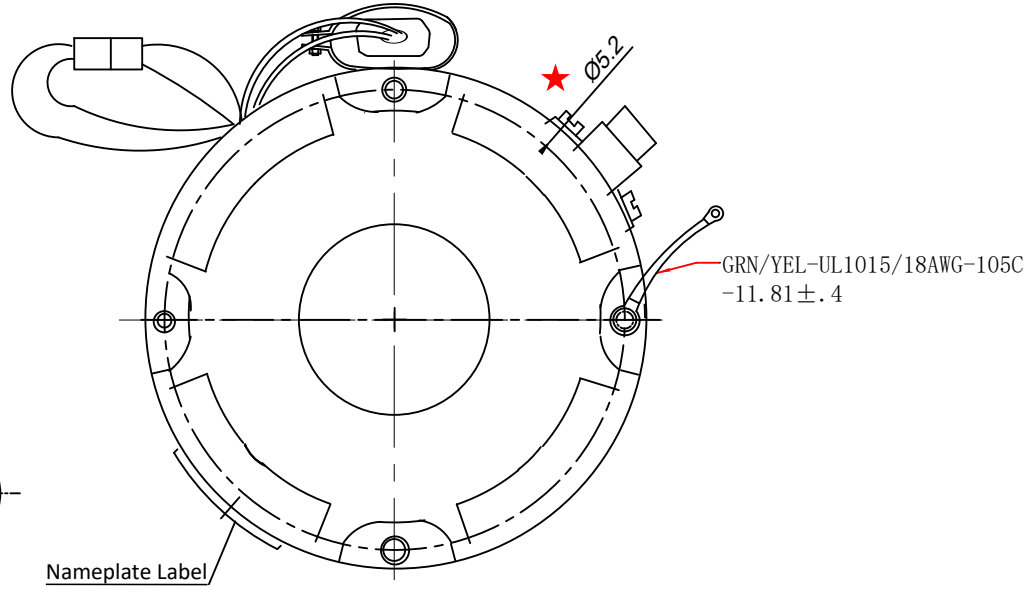

★ Motor Label

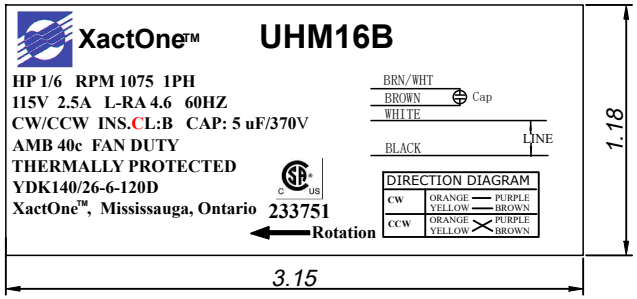

SPECIFICATIONS:

1. MOTOR ROTATION: CW FROM SHAFT END
2. LEAD WIRE WHITE/BLACK LENGTH -35.43±1.97,WITH 6.3 LINE TERMINAL BROWN,BRN/WHT-4.72±1.18,WITH 6.3 FLAG TERMINALS
3. LEAD WIRE -UL1275/18AWG/105C.
4. ★ Star mark is the CTQ dimension.

BSR Distribution Inc. www.bsrinc.ca			Title	XactOne™		
			Part #	UHM16B		
Controlled	Name	Date	Customer Drawing #		Customer	
Drawn			Version #			
Checked by			Material			
Checked by			Weight		Scale	
Checked by			Page of			
Approved by			PDM NO.		SAP NO.	